Code No: 09A10291-3 **R09**

B. Tech I Year Examinations, May/June -2012
ENGINEERING DRAWING
(COMMON TO ALL BRANCHES)

Time: 3 hours **Max. Marks: 75**

Answer any five questions
All questions carry equal marks
---

1. a) A cricket ball is thrown vertically up, it reaches a maximum height of 15 meters and falls on the ground at a distance of 30 meters from point of projection of the ball till it reaches the ground. Draw the path followed by the cricket ball and name the curve.
   b) Construct a scale of 1:5 to show decimeters and centimeters and long enough to measure up to 1m. Show a distance of 6.3 dm on it. [15]

2. A 100 mm long line AB is parallel to and 40 mm above the H.P. Its two ends are 25 mm and 50 mm in front of the V.P. respectively. Draw its projections and find its inclination with the V.P and show traces. [15]

3. A square pyramid, having a base with a 40 mm side and a 75 mm long axis, has a triangular face in the V.P. and an auxiliary inclined plane passing through the axis makes an angle of 45˚ with the H.P. Draw its projections when its base is closer to the H.P. than to its apex. [15]

4. A cylinder, with a 50 mm diameter and a 70 mm long axis, is resting on its base on the H.P. It is cut by a section plane inclined at 45^0 to the H.P. and perpendicular to the V.P., such that the plane bisects the axis. Draw its front view, sectional top view and true shape of the section on an A.I.P. parallel to the section plane. [15]

5. A vertical cylinder of diameter 80 mm is completely penetrated by another cylinder of 60 mm diameter, their axis bisecting each other at right angles. Draw their projections showing curves of penetration, assuming the axis of the penetrating cylinder to be parallel to V.P. [15]

6. A sphere with a 50 mm diameter rests centrally over a cube with a 60 mm side. Draw its isometric view. [15]

7. Draw the following views of the block shown in figure. All dimensions are in mm.
   a) Front View
   b) Top View
   c) Right side view. [15]

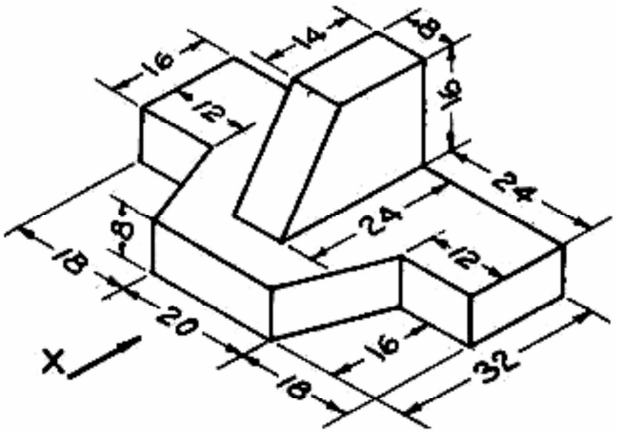

8. Draw the perspective view of a straight line AB, 35 mm long parallel to both the picture plane and ground plane, and 7 mm above the ground plane, and 18 mm behind the picture plane. The station point is 50 mm in front of the picture plane, 36 mm above the ground plane and is contained by a central plane 16 mm to the left of end A. [15]

*****